GP Component

REV.	ECN NO.	LOCATIONS	DESCRIPTION	DATE	DESIGN
A0			Initial	2023/06/14	Hanson
A1			Change Shell	2023/06/28	Hanson
A2			Change DIM.	2023/08/18	Hanson

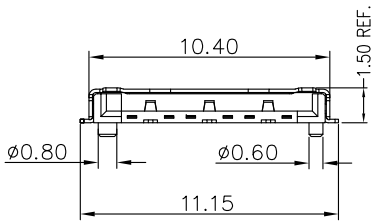

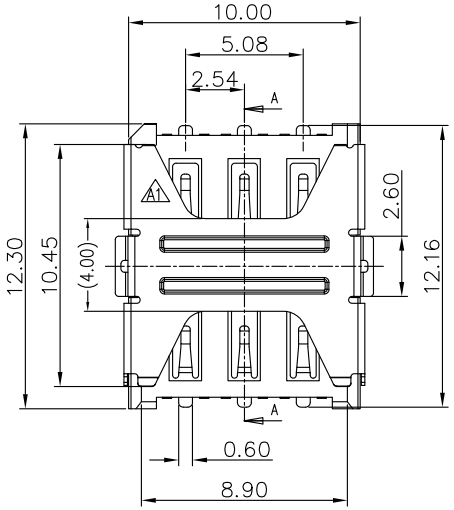

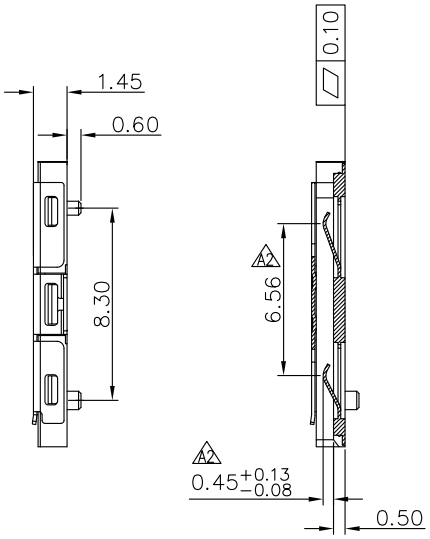

SECTION: A-A

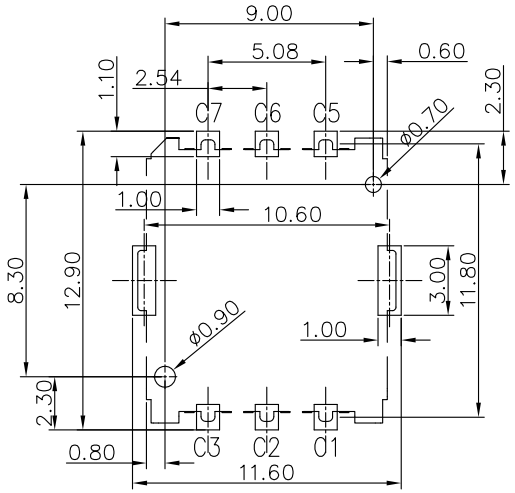

RECOMMENDED PCB LAYOUT
GENERAL TOLERANCE ±0.05

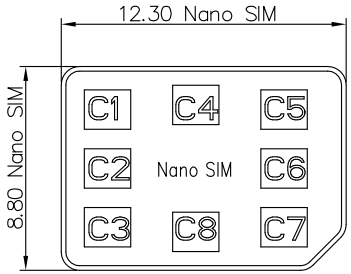

SIM pin assignment	
PIN#	Name
C1	VCC供电电压
C2	RST重置
C3	CLK时钟
C5	GND接地
C6	VPP程序电压
C7	I/O输入输出

Note:

MATERIAL:

Insulator: LCP UL94V-0,BLACK
Contact: C5191
SHELL: SUS304

PLATING:

Contact: G/F OVER Ni.
Shell: G/F PLATED ON SOLDER AREA, Ni PLATED OVERALL

Electrical:

Current Rating: 0.5A
Voltage Rating: 30V AC/DC
Ambient Temperature Range: -40°C~+85°C
Storage Temperature Range: -40°C~+85°C
Ambient Humidity Range: 95% R.H. Max.
Contact Resistance:100m Ω max.
Insulation Resistance:1000M Ω min./500VDC
Mating Cycles:3,000 Insertions
Reflow peak temp.: 260°C ±5°C, 3~5 S

MATRIX PART NO:

MSM - 02 - 01 - 06 - 14 - 97

- MSM: Matrix SIM
- 02: 01: Push; 02: Non-Push
- 01: Plating 01:G/F
- 06: Pin number 06:6pin
- 14: Height
- 97: Series Number

Matrix Electronics Co.,Ltd

TOLERANCE: X.X ±0.38; X.XX ±0.25; X.XXX ±0.15; ANGLE: ±5°	DESIGN BY: Hanson Huang	DATE: 2023/08/18	PART NAME: Nano SIM CARD CONNECTOR
	CHECKED BY: Vicky Hsieh	DATE: 2023/08/18	PART NO. MSM-02-01-06-14-97
UNIT: mm [inch]	APPROVED BY1: Richard Hsieh	DATE: 2023/08/18	MOLD NO. NA
SCALE:1:1 SIZE:A4	APPROVED BY2: Richard Hsieh	DATE: 2023/08/18	DRAW NO. / SHEET NO. 1 OF 1