GP Component

REV.	ECN NO.	LOCATIONS	DESCRIPTION	DATE	DESIGN
A0			Initial	2025/07/29	Hanson

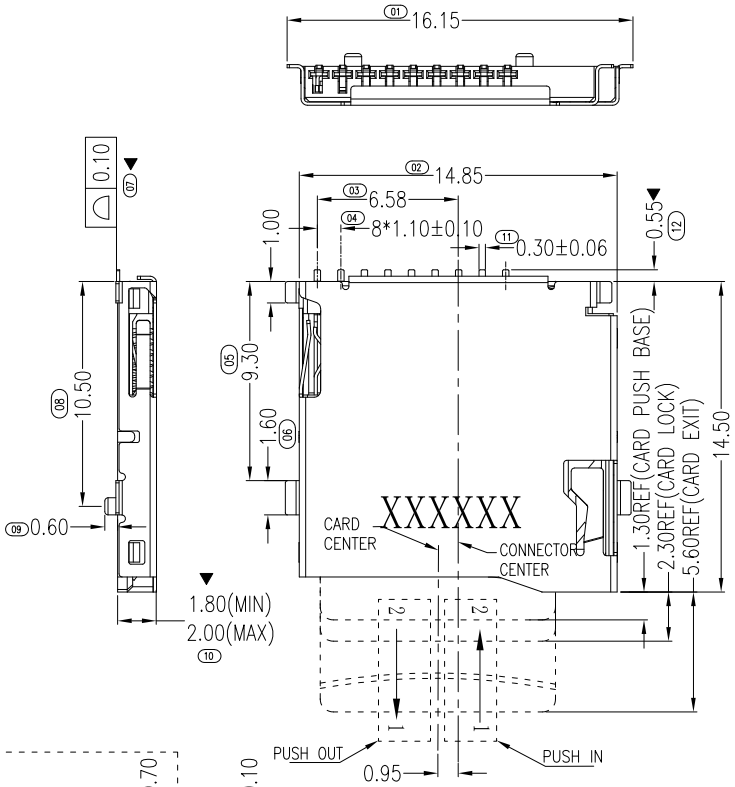

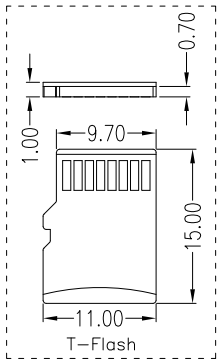

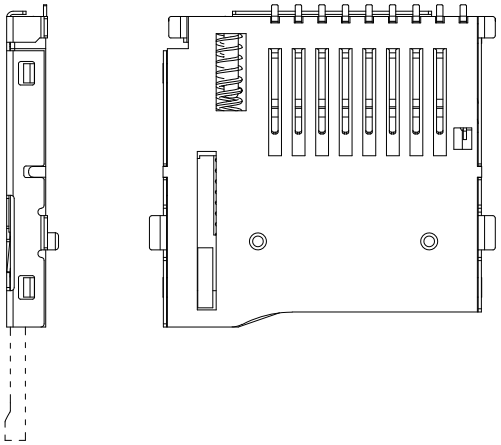

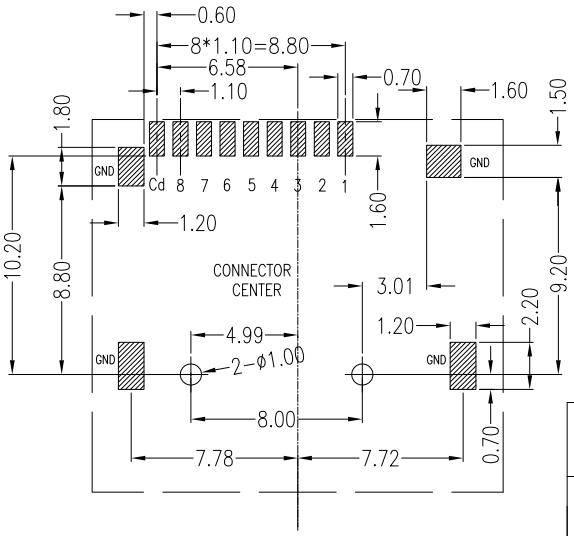

RECOMMENDED P.C.B HOLE LAYOUT
COMPONENT SIDE VIEW(TOLERANCE: +/-0.05)

PAD

NOTES:
ELECTRICAL CHARACTERISTICS
CONTACT CURRENT RATING:0.5A
DIELECTRIC WITHSTANDING VOLTAGE:AC 500V
INSULATION RESISTANCE:500MΩ MIN
CONTACT RESISTANCE:100mΩ MAX
ENVIRONMENTAL
TEMPERATRUE RANGE:-40°C TO +85°C
MECHANICAL CHARACTERISTICS
MATING CYELES:5000 INSERTIONS
INSERTION/OUT FORCE:0.1-4.0KGF
MATERIAL
INSULATOR:HIGH TEMPERATURE PLASTIC UL94V-0
COLOR: BLACK
CONTACT:COPPER ALLOY
SHELL:STAINLESS
SPRING:SWP
PLATING:
CONTACT UNDERPLATE:NICKEL 40u".
CONTACT AREA:GOLD FLASH OVER NICKEL 40u" .
SOLDER AREA:GOLD FLASH OVER NICKEL 40u" .
SHELL:PLATE 30u"NICKEL MIN OVER ALL
SALT SPRAY: CONTACT AND SHELL 48H

MATRIX PART NO:

MMS - 01 - 01 - 08 - 20 - 93

- MMS: Matrix Micro SD
- 01: 01 : Push, 02 : Non-Push
- 01: Plating 01:G/F
- 08: Pin number 08:8pin
- 20: Height
- 93: Series Number

Circuit Diagram for Card Detect Switch

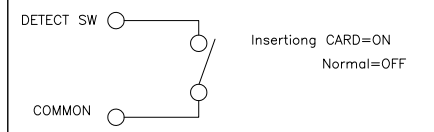

COMMON should be connected to GND on the PCB circuit

PIN NO.	NAME	YTPE	DESCRIPTION
1	DAT2	I/O/PP	DATE LINE(BIT2)
2	CD/DAT3	I/O/PP	CARD DETECT DATE LIN(BIT3)
3	CMD	PP	COMMAND RESPONSE
4	VDD	S	SUPPLY VOLTAGE
5	CLX	I	CLOCK
6	VSS	S	SUPPLY VOLTAGE GROUND
7	DATO	I/O/PP	DATE LINE(BITO)
8	DAT1	I/O/PP	DATE LINE(DIT1)
Cd	CARD DETECTION		
GND	GROUND		

Matrix Electronics Co.,Ltd

TOLERANCE: X ±0.35, X.X ±0.25, X.XX ±0.15, X.XXX ±0.15, ANGLE: ±5°	DESIGN BY : Hanson	DATE : 2025/07/29	PART NAME: TF card push Outside welding
	CHECKED BY: Janice Liu	DATE : 2025/07/29	PART NO. MMS-01-01-08-20-93
UNIT: mm [inch]	APPROVED BY1: Richard Hsieh	DATE : 2025/07/29	MOLD NO. NA
SCALE:1:1 SIZE:A4	APPROVED BY2: Richard Hsieh	DATE : 2025/07/29	DRAW NO. / SHEET NO. 1 OF 1