GP Component

REV.	ECN NO.	LOCATIONS	DESCRIPTION	DATE	DESIGN
A0			Initial	2018/10/07	Phebe Su
A0.1			Add D/C	2023/04/11	Hanson

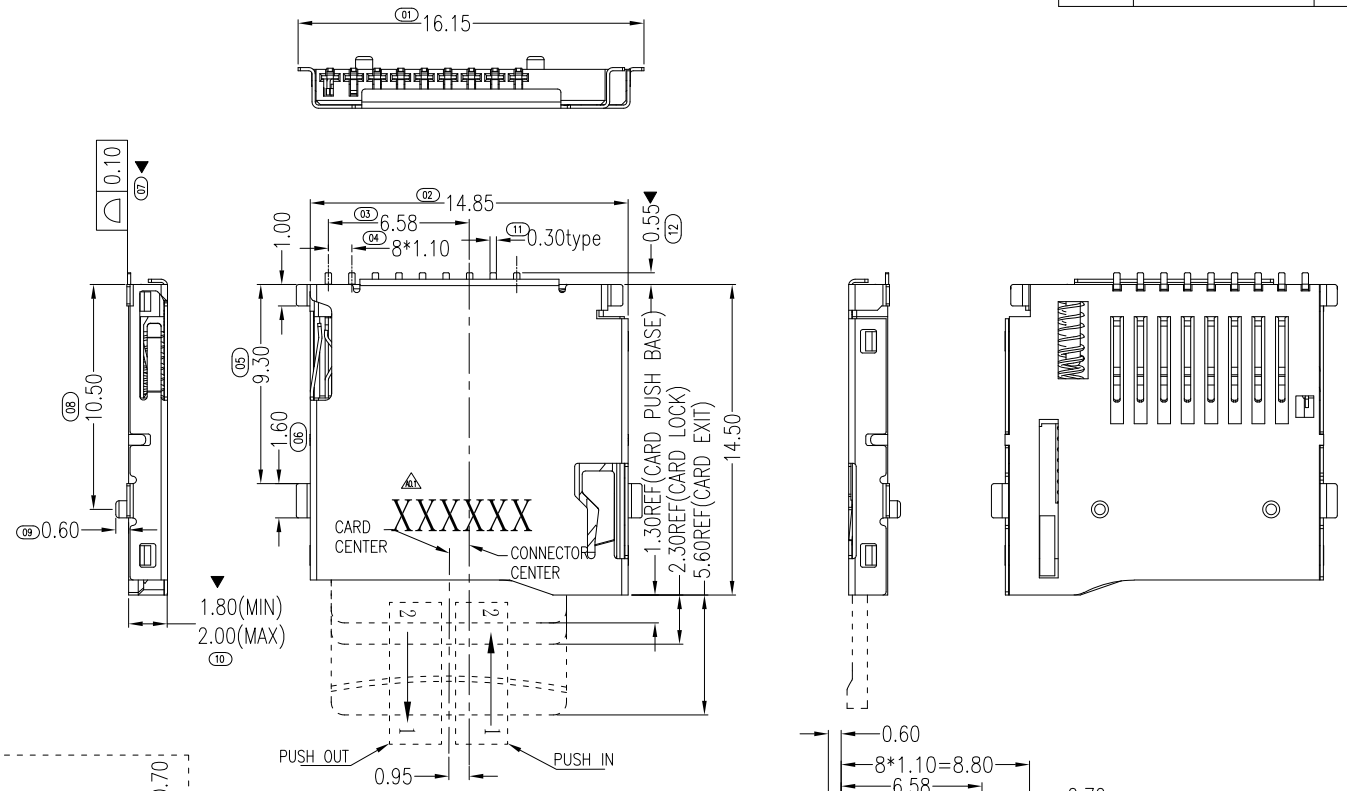

NOTES:

ELECTRICAL CHARACTERISTICS
- CONTACT CURRENT RATING:0.5A
- DIELECTRIC WITHSTANDING VOLTAGE:AC 500V
- INSULATION RESISTANCE:500MΩ MIN
- CONTACT RESISTANCE:100mΩ MAX

ENVIRONMENTAL
- TEMPERATRUE RANGE:-40°C TO +85°C

MECHANICAL CHARACTERISTICS
- MATING CYELES:5000 INSERTIONS
- INSERTION/OUT FORCE:0.1-4.0KGF

MATERIAL
- INSULATOR:HIGH TEMPERATURE PLASTIC UL94V-0
  COLOR: BLACK
- CONTACT:COPPER ALLOY
- SHELL:STAINLESS
- SPRING:SWP

PLATING:
- CONTACT UNDERPLATE:NICKEL 40u".
- CONTACT AREA:GOLD FLASH OVER NICKEL 40u" .
- SOLDER AREA:TIN 80u" MIN OVER NICKEL 40u" .
- SHELL:PLATE 30u"NICKEL MIN OVER ALL

MATRIX PART NO:

MMS - 01 - 01 - 08 - 20 - 63

- MMS: Matrix Micro SD
- 01: 01 : Push; 02 : Non-Push
- 01: Plating 01:G/F 30:30u
- 08: Pin number 06:6pin 08:8pin
- 20: Height
- 63: Series Number

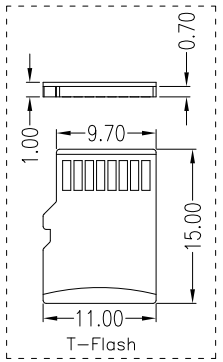

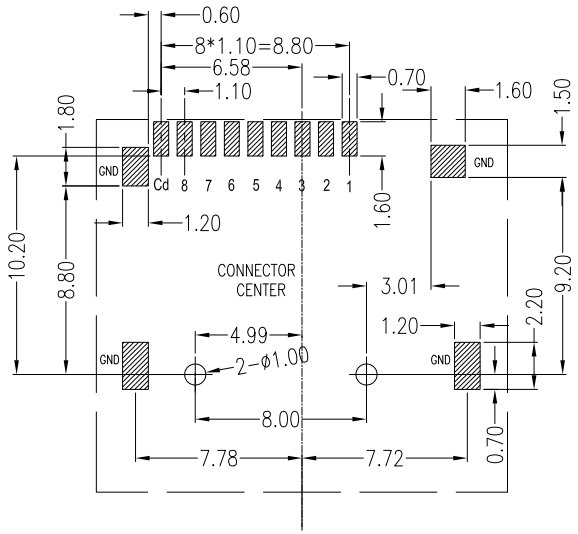

RECOMMENDED P.C.B HOLE LAYOUT
COMPONENT SIDE VIEW(TOLERANCE: +/-0.05)

PAD

PIN NO.	NAME	YTPE	DESCRIPTION
1	DAT2	I/O/PP	DATE LINE(BIT2)
2	CD/DAT3	I/O/PP	CARD DETECT DATE LIN(BIT3)
3	CMD	PP	COMMAND RESPONSE
4	VDD	S	SUPPLY VOLTAGE
5	CLX	I	CLOCK
6	VSS	S	SUPPLY VOLTAGE GROUND
7	DATO	I/O/PP	DATE LINE(BITO)
8	DAT1	I/O/PP	DATE LINE(DIT1)
Cd	CARD DETECTION		
GND	GROUND		

Circuit Diagram for Card Detect Switch

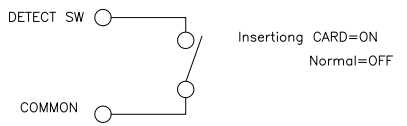

COMMON should be connected to GND on the PCB circuit

Matrix Electronics Co.,Ltd

TOLERANCE:	DESIGN BY :	DATE :	PART NAME:	
X ±0.35 X.X ±0.25 X.XX ±0.15 X.XXX ±0.15 ANGLE: ±3°	Hanson	2023/04/11	TF card push Outside welding	
	CHECKED BY: Janice Liu	DATE : 2023/04/11	PART NO.	MMS-01-01-08-20-63
UNIT: mm [inch]	APPROVED BY1: Richard Hsieh	DATE : 2023/04/11	MOLD NO.	NA
	APPROVED BY2: Richard Hsieh	DATE : 2023/04/11	DRAW NO.	
SCALE:1:1 SIZE:A4			SHEET NO.	1 OF 1