GP Component

REV.	ECN NO.	LOCATIONS	DESCRIPTION	DATE	DESIGN
A0			Initial	2022/09/22	Hanson

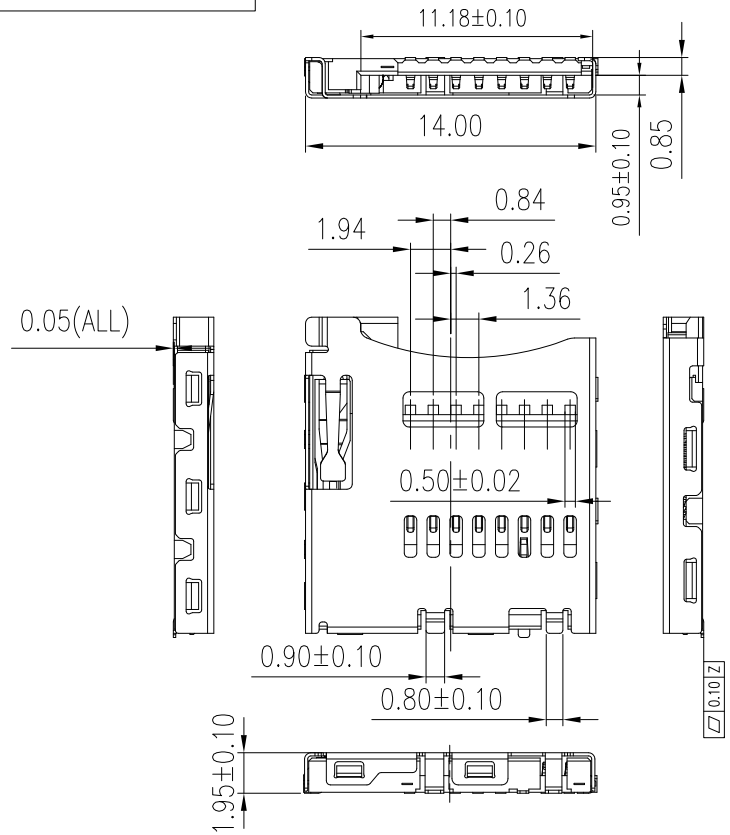

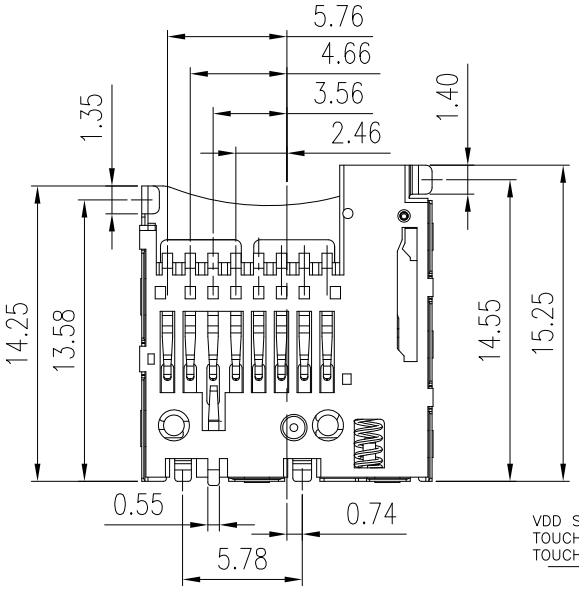

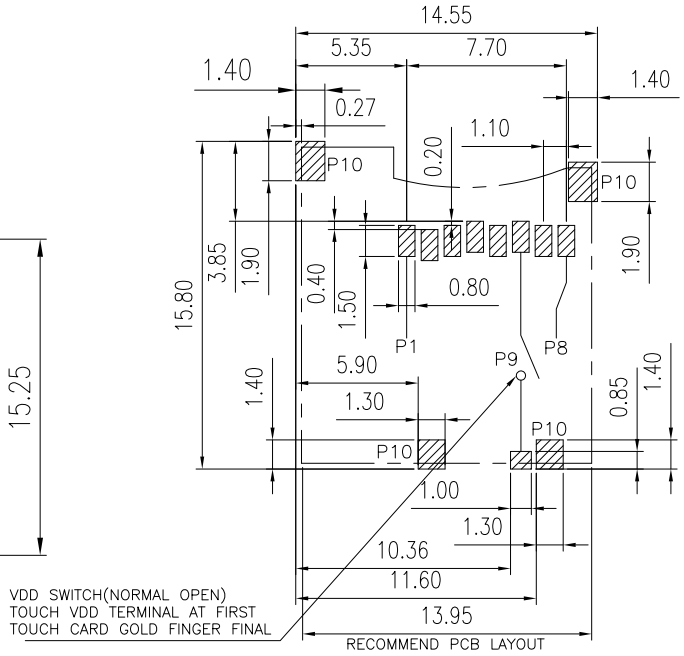

RECOMMEND PCB LAYOUT
GENERAL TOLERANCE ±0.05

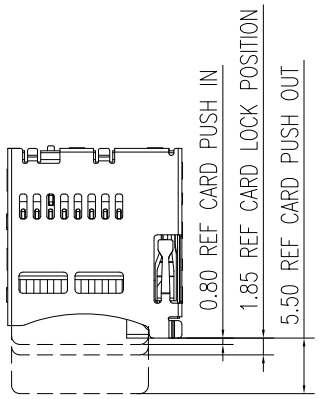

NOTES:
1. MATERIAL:
   Housing:High Temperature Thermoplastic UL94V-0; Color Black.
   Contacts: Phosphor Bronze.
   Tin 80u" at Solder Tail,
   Selectived G/F on Contact Area plating.
   Shell: Stainless.
   G/F on Contact solder Area Over Nickel Plating.
2.Electrical Characteristics:
   Operating voltage :100v AC(rms)/DC.
   Current rating :0.5 A.
   Operating Temperature:-25℃~+85℃.
   Insulation resistance:1000M ohms min. at 500VDC
   Dielectric withstanding voltage :500 VAC/1minute.
   Contact resistance:100m ohms max.
3.Mechanical characteristics
   Insertion force: 2.0kg Max.
   Extraction force: 0.5kg Min.
   Mating durability: 10000 cycles at the speed rate of 400-600 cycles/h; Without distortion of plastic and serious wear and tear in terminal, No signal break.

MATRIX PART NO:

MMS - 01 - 01 - 08 - 19 - 84

- MMS: Matrix TF card
- 01: 01: Push; 02: Non-Push
- 01: Plating 01:G/F 15:15u
- 08: Pin number 06:6pin 08:8pin
- 19: Height
- 84: Series Number

Pin No.	
PIN1	DAT2
PIN2	CD/DAT3
PIN3	CMD
PIN4	VDD
PIN5	CLK
PIN6	VSS
PIN7	DAT0
PIN8	DAT1
PIN9	CARD DETECT
PIN10	GND

开关插卡状态

CIRCUIT: CD GROUND	CD GROUND
WITHOUT CARD	CARD INSERTED

Matrix Electronics Co.,Ltd

TOLERANCE: X. ±0.30; X.X ±0.20; X.XX ±0.10; X.XXX ±0.10; ANGLE: ±2°	DESIGN BY : Hanson Huang	DATE : 2022/09/22	PART NAME: TF Card常开一体式 无柱
	CHECKED BY: Vicky Hsieh	DATE : 2022/09/22	PART NO. MMS-01-01-08-19-84
UNIT: mm [inch]	APPROVED BY1: Richard Hsieh	DATE : 2022/09/22	MOLD NO. NA
SCALE:1:1 SIZE:A4	APPROVED BY2: Richard Hsieh	DATE : 2022/09/22	DRAW NO.
			SHEET NO. 1 OF 1