GP Component

REV.	ECN NO.	LOCATIONS	DESCRIPTION	DATE	DESIGN
A0			Initial	2024/07/03	Ken Lin

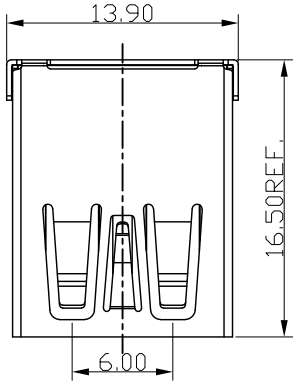

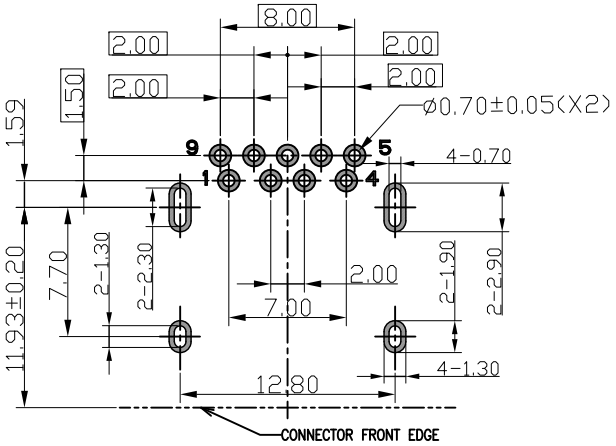

REFERENCE PCB LAROUT (THICKNESS: 1.60mm)
TOLERANCE: Ø±0.05mm

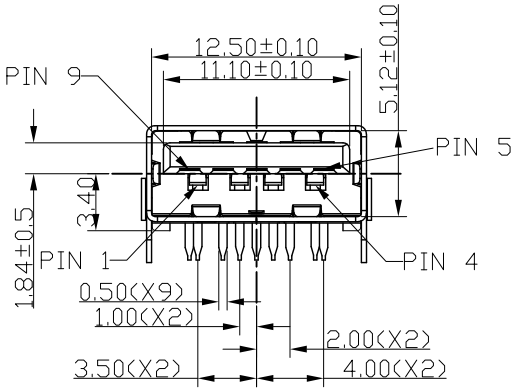

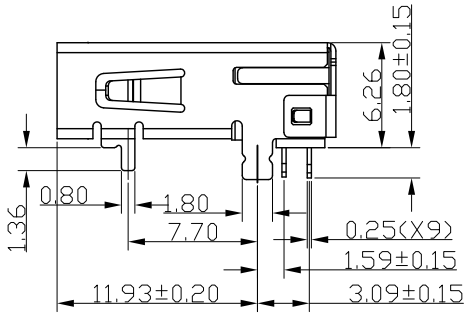

SPECIFCATIONS:
1.0 Electrical Performance:
1.1 Contact current Rating:
1.80 Amperes for VBUS and GND contacts
0.25 Amperes for all other contacts
1.2 Dielectric Withstanding Voltage:AC 100V/minute
1.3 Insulation resistance:100M ohms Min
1.4 Contact Resistance:
30m ohm Max for VBUS and GND contacts
50m ohm Max for all other contacts
1.5 Voltage Rating: DC30 Vac (rms)
2.0 Mechanical Performance:
2.1 Mating Force:35N Max
2.2 Unmating Force:10N~25N;
2.3 Durability:5000 cycles
3.0 Environmental Performance:
3.1 Temperature Range:
3.1.1 Operating Temperatures:−20°C TO +85°C.
3.1.2 Storage Temperatures: −45°C TO +60°C.
3.1.3 Resistonce to REFLOW SOLDERING HEAT:260°+0/−5°,10s.
3.2 Salt Spray 24h for contact gold&shell Nicke
4.0 MATERIAL:
4.1 Housing:PA9T,Color: Black, UL94V−0
4.2 Contact:USB2.0 Contacts C5191
USB3.0 Contacts C2680
4.3 Shell:SUS
5.0 PLATING:
5.1 Contact: Au 1u" Plated on contact area
Tin 100u"Plated on solder area (Matte Sn)
Nickel 50u"Min Plated underplating over all.
5.2 Shell:Nickel 30u"Min underplating over all.

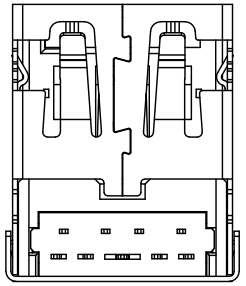

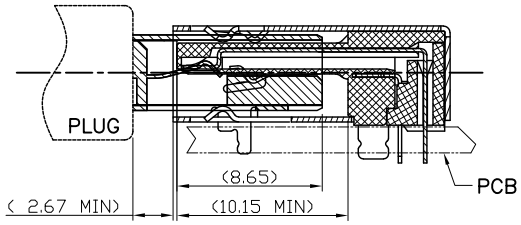

Mating Drawing

MATRIX PART NO:

MUSB 09 - 01 - 533

MATRIX USB — MUSB
Pin Number — 09
Plating — 01
Series number — 533

Plating
01:Gold Flash(1u")
15:15u"
30:30u"

Pin #	SIGNAL NAME	DESCRIPTION	MATING SEQUENCE
1	VBUS	POWER	SECOND
2	D−	USB 2.0 DIFFERENTIAL PAIR	THIRD
3	D+		
4	GND	GROUND FOR POWER RETURN	SECOND
5	StdA_SSRX-	SUPERSPEED RECEIVER DIFFERENTIAL PAIR	LAST
6	StdA_SSRX+		
7	GND_DRAIN	GROUND FOR SIGNAL RETURN	
8	StdA_SSTX-	SUPERSPEED TRANSMITTER DIFFERENTIAL PAIR	
9	StdA_SSTX+		
Shell	Shield	CONNECTOR METAL SHELL	FRIST

Matrix Electronics Co.,Ltd

TOLERANCE: X. ±0.35; X.X ±0.25; X.XX ±0.20; X.XXX ±0.10; ANGLE: ±3°	DESIGN BY : Ken Lin	DATE : 2024/07/03	PART NAME: USB 3.2 Gen2 A TYPE FEMALE R/A DIP CH3.4
	CHECKED BY: Vicky Hsieh	DATE : 2024/07/03	PART NO. MUSB09-01-533
	APPROVED BY1: Richard Hsieh	DATE : 2024/07/03	MOLD NO. NA
UNIT: mm [inch]	APPROVED BY2: Richard Hsieh	DATE : 2024/07/03	DRAW NO.
SCALE:1:1 SIZE:A4			SHEET NO. 1 OF 1