GP Component

REV.	ECN NO.	LOCATIONS	DESCRIPTION	DATE	DESIGN
A0			Initial	2016/10/24	Phebe Su
A1			Change	2017/11/07	Phebe Su
A2			Corrected tolerance	2019/04/15	Summer Wang
A3			Add dimension	2020/05/22	Hanson
A4			Change dimension	2020/06/12	Ginny Liao

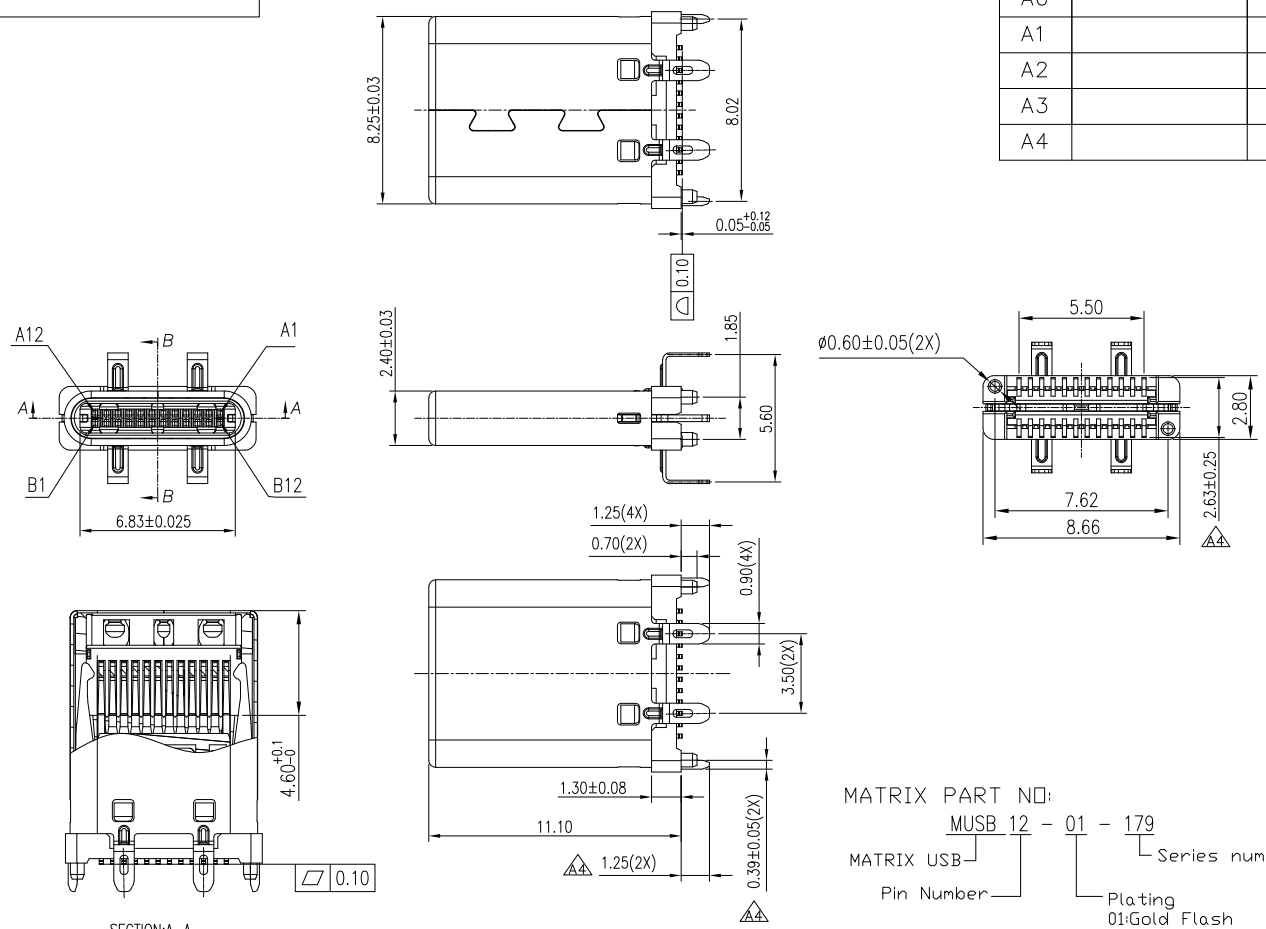

SECTION:A-A

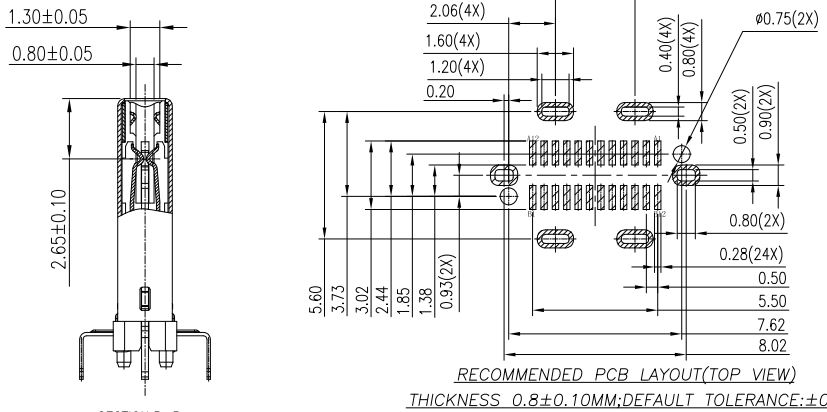

SECTION:B-B

RECOMMENDED PCB LAYOUT(TOP VIEW)

THICKNESS 0.8±0.10MM;DEFAULT TOLERANCE:±0.05

MATRIX PART NO:

MUSB 12 - 01 - 179

MATRIX USB

Pin Number

Plating
01:Gold Flash
15:15u"
30:30u"

Series number

NOTE:
1.MATERIAL SPECIFICATION:
1.HOUSING&PICKUP COVER:LCP,UL94 V-0. Black
2.CONTACTS: COPPER ALLOY(C7025)
3.LATCH: STAINLESS STEEL(SUS301)
4.SPRING: STAINLESS STEEL(SUS304)
4.FRONT SHELL: STAINLESS STEEL(SUS304)
2.PLATING SPECIFICATION:
2-1.CONTACTS:
GOLD FLASH ON CONTACT AREA,
TIN PLATING ON SOLDERTAIL
2-2.FRONT SHELL:
Ni 30u" MIN. UNDER PLATED OVER ALL.
2-3.LATCH:
Ni 50u" MIN. UNDER PLATED OVER ALL.
80u" MIN. TIN PLATED ON SOLDER AREA.
2-4.SPRING:
CLEAR ONLY
3.MECHANICAL PERFORMANCE,
3-1.INSERTION FORCE: 0.5~2.0kgf.
3-2.REMOVAL FORCE: 0.8kgf~2.0kgf.
3-3.DURABILITY: 10000 CYCLES.
4.ELECTRICAL PERFORMANCE,
4-1. CURRENT RATING:3.0A
VOLTAGE RATING:5.0V
4-2. LLCR:
VBUS & GND PINS AND OTHER PINS: 40mΩ/PIN MAX.
SHIELD: 50mΩ/MAX.
LLCR MAX. CHANGE OF ALL PINS: 10mΩ.
4-3.INSULATION RESISTANCE: 100MΩ MIN
4-4.DIELECTRIC WITHSTAND VOLTAGE,AC 100V FOR 1 MINUTE.
5. ENVIRONMENTAL PERFORMANCE:
OPERATING TEMPERATURE: -25℃~+85℃.
6.IR REFLOW:
THE PEAK TEMPERATURE ON THE BOARD SHALL
BE MAINTAINED FOR 10 SECONDS AT 260°C.

PIN	SIGNAL NAME	PIN	SIGNAL NAME
A1	GND	B12	GND
A2	SSTXP1	B11	SSRXP1
A3	SSTXN1	B10	SSRXN1
A4	VBUS	B9	VBUS
A5	CC1	B8	SBU2
A6	DP1	B7	DN2
A7	DN1	B6	DP2
A8	SBU1	B5	CC2
A9	VBUS	B4	VBUS
A10	SSRXN2	B3	SSTXN2
A11	SSRXP2	B2	SSTXP2
A12	GND	B1	GND

Matrix Electronics Co.,Ltd

TOLERANCE:
X.
X.X ±0.30
X.XX ±0.20
X.XXX ±0.10
ANGLE: ±3°
UNIT: mm [inch]
SCALE:1:1 SIZE:A4

DESIGN BY : Ginny Liao	DATE : 2020/06/12	PART NAME: USB CM VERTICAL TYPE HIGHT=11.1	
CHECKED BY: Vicky Hsieh	DATE : 2020/06/12	PART NO.	MUSB12-01-179
APPROVED BY1: Richard Hsieh	DATE : 2020/06/12	MOLD NO.	NA
APPROVED BY2: Richard Hsieh	DATE : 2020/06/12	DRAW NO.	
		SHEET NO.	1 OF 1