GP Component

REV.	ECN NO.	LOCATIONS	DESCRIPTION	DATE	DESIGN
A0			Initial	2013/09/06	Jamie Zie
A1			Change	2016/04/01	Phebe Su
A2			Add DIM	2016/05/04	Phebe Su
A3			Change shell plating	2018/03/20	Phebe Su
A4			Modify the shell	2020/11/27	Ginny Liao
A5			Change Dim	2021/01/08	Ginny Liao
A6			Change Dim	2021/10/19	Ken Lin
A7			Add Notes.	2025/01/20	Ken Lin

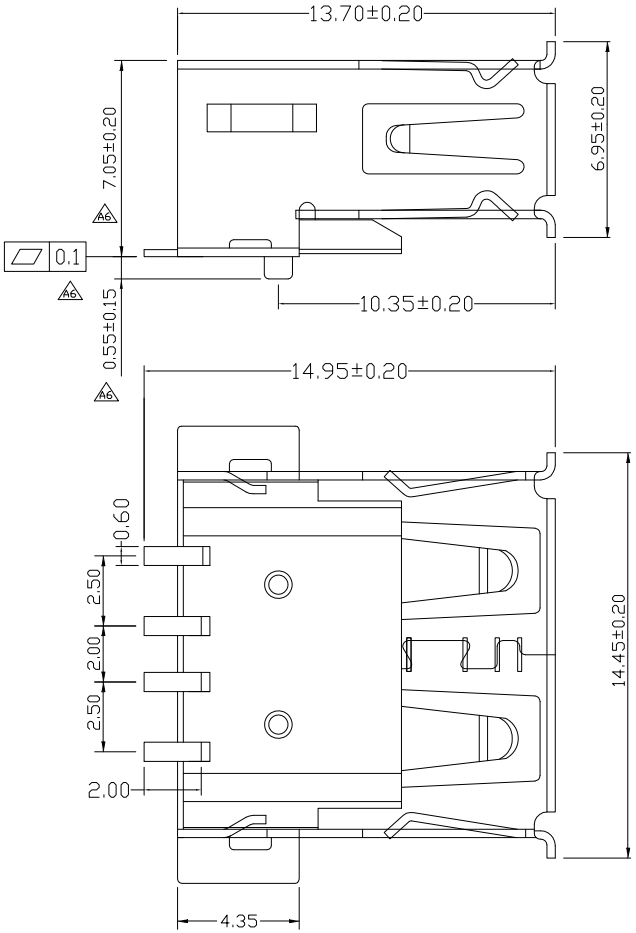

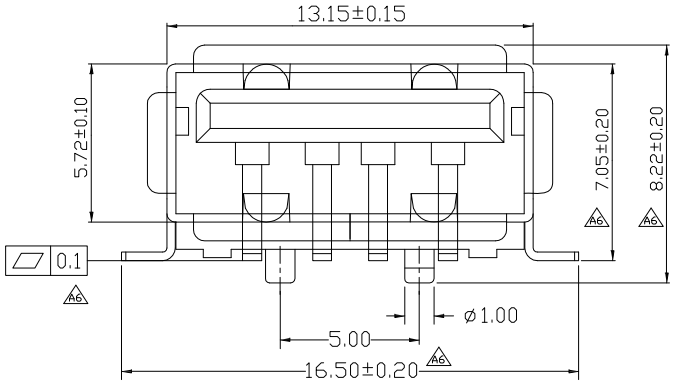

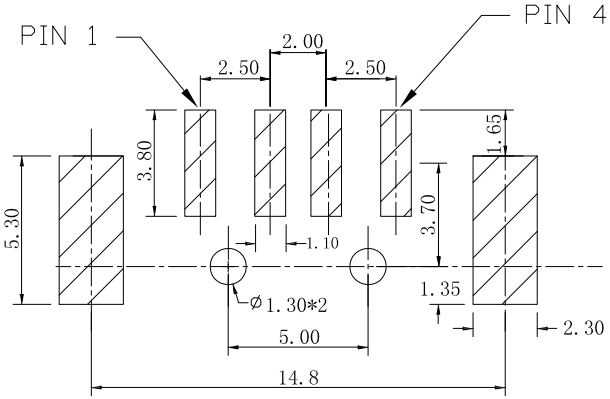

RECOMMENED PCB LAYOUT
TOLERANCE : ±0.05
(TOP VIEW)

NOTES:
1.MATERIAL:
1.1 HOUSING: HIGIH TEMPERATURATURE THERAL PLASTIC, LCP COLOR:BLACK
1.2 CONTACT: COPPER ALLOY.
1.3 SHELL: COPPER ALLOY/SPCC .
2.FINISH:
2.1 CONTACT: Au 3u" IN CONTACT AREA/100u" MIN TIN IN SOLDER AREA,50u" MIN. NICKEL UNDERPLATING OVER ALL.
2.2 SHELL: SOLDERABILITY NICKEL PLATING OVER ALL.
A7 3. ENVIRONMENT:
OPERATING TEMPERATURE-40°C~+95°C

MATRIX PART NO:

MUSB 04 - 03 - 35

MATRIX USB
Pin Number
Plating 03"3u"
Series number

USB Connector
Termination Assignment

Contact Number	Signal Name
1	VBUS
2	D-
3	D+
4	GND

Matrix Electronics Co.,Ltd

TOLERANCE: X. ±0.25, X.X ±0.20, X.XX ±0.15, X.XXX ±0.05, ANGLE: ±3°	DESIGN BY : Ken Lin	DATE : 2025/01/20	PART NAME: USB 2.0 AF, SMT type
	CHECKED BY: Vicky Hsieh	DATE : 2025/01/20	PART NO. MUSB04-03-35
	APPROVED BY1: Richard Hsieh	DATE : 2025/01/20	MOLD NO. NA
UNIT: mm [inch]	APPROVED BY2: Richard Hsieh	DATE : 2025/01/20	DRAW NO.
SCALE:1:1 SIZE:A4			SHEET NO. 1 OF 1