GP Component

REV.	ECN NO.	LOCATIONS	DESCRIPTION	DATE	DESIGN
A0			Initial	2017/04/14	Phebe Su
A1			Change material of housing	2017/05/02	Phebe Su

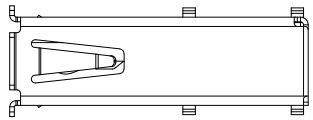

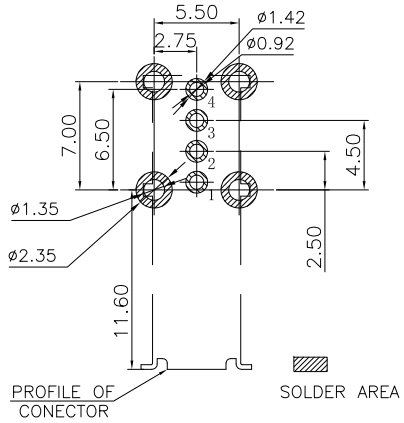

RECOMMEND P.C.BOARD LAYOUT
PCB TOLERANCE:±0.05

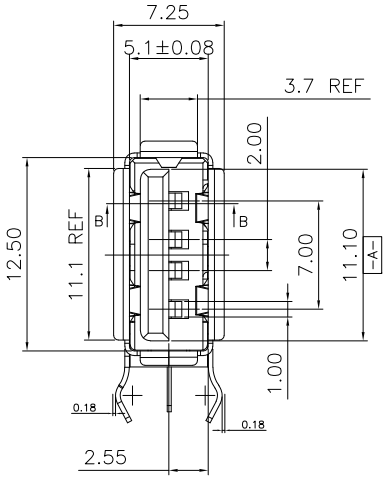

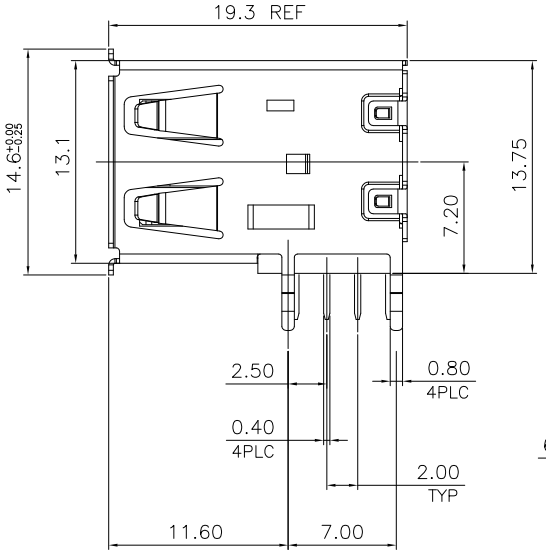

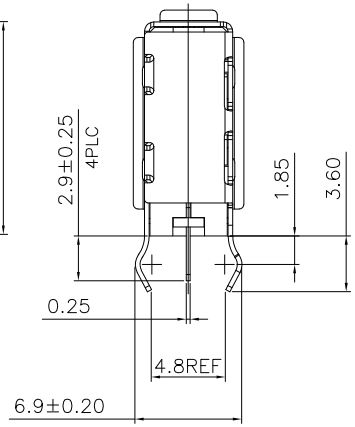

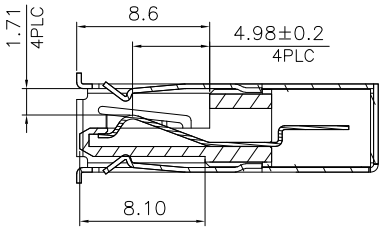

SECTION B–B

USB Connector Termination Assignment

Contact Number	Signal Name
1	VBUS
2	D–
3	D+
4	GND

NOTES:

1.MATERIAL:
- 1.1 HOUSING: UL94V–0, LCP COLOR:WHITE
- 1.2 SPACER: HIGIH TEMPERATURATURE THERAL PLASTIC, LCP COLOR:BLACK
- 1.3 CONTACT: COPPER ALLOY.
- 1.4 SHELL: SUS201.

2.FINISH:
- 2.1 CONTACT: G/F ON CONTACT AREA/100μ″ Min TIN ON SOLDER AREA, 80μ″ MIN. NICKEL UNDERPLATING OVER ALL.
- 2.2 SHELL: 50μ″ MIN.NIKEL PLATING OVERALL.

3.ELECTRICAL SPECIFICATION:
- 3.1 CURRENT RATING:1.5A
- 3.2 VOLTAGE RATING:30V
- 3.3 TEMPERATURE RANGE:–40°C~85°C
- 3.4 CONTACT RESISTANCE:30mΩ MAX.
- 3.5 DIELECTRIC WITHSTANDING VOLTAGE:500V AC
- 3.6 INSULATION RESISTNACE:1000MΩ MIN
- 3.7 MECHANICAL CHARACTERISTICS:
  - Insertion Force:35N MAX.
  - Extraction Force:10N MIN.

MATRIX PART NO:

MUSB 04 – 01 – 222

- MUSB: MATRIX USB
- 04: Pin Number
- 01: Plating
  - 01:Gold Flash
  - 15:15u″
  - 30:30u″
- 222: Series number

Matrix Electronics Co.,Ltd

TOLERANCE: X. / X.X ±0.30 / X.XX ±0.25 / X.XXX ±0.05 / ANGLE: ±3°	DESIGN BY : Phebe Su	DATE : 2017/05/02	PART NAME:	USB 2.0母座側向 90° DIP TYPE
	CHECKED BY: Vicky Hsieh	DATE : 2017/05/02	PART NO.	MUSB04–01–222
UNIT: mm [inch]	APPROVED BY1: Richard Hsieh	DATE : 2017/05/02	MOLD NO.	NA
SCALE:1:1 SIZE:A4	APPROVED BY2: Richard Hsieh	DATE : 2017/05/02	DRAW NO. / SHEET NO.	1 OF 1