GP Component

REV.	ECN NO.	LOCATIONS	DESCRIPTION	DATE	DESIGN
A0			Initial	2019/04/10	Hanson
A0.1			Change	2024/02/19	Ken Lin

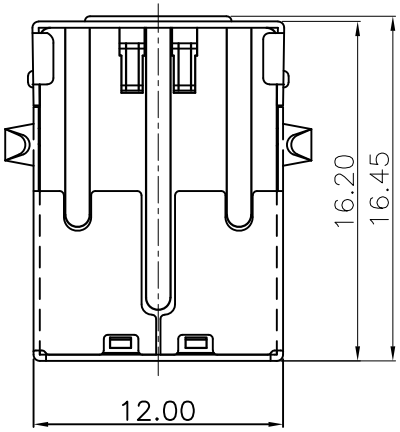

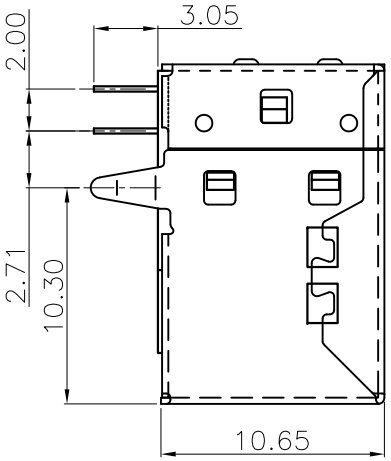

NOTE:

1. Material:
   Housing: PBT Black;Thermoplastics,UL94V-0;(Halogen Free)
   Contact: Copper Alloy
   Shell: Copper Alloy
   Back Shell: Ferro Alloy
2. FINISH:
   Contact: Gold Flash Plated on Contact Area,
   80u" Tin Plated on Solder Tails,
   50u" Min.Nickel Underplating Over All.
   Shell: 50u" Min.Nickel Underplating Over All.
3. Specification:
   A0.1 3.1: Voltage Current Rating: 2.0Amp. 30V/AC
   3.2: Electrical:
   Insulation Resistance: 1000MΩ Min.
   Contact Resistance: 30mΩ Max.
   Dielectric Withstanding Voltage: 500V/AC 1Minute
   3.3: MECHANICAL
   Mating force: 35N Max.
   Unmating force:10N Min.
   Durability: 1500 cycles Min.

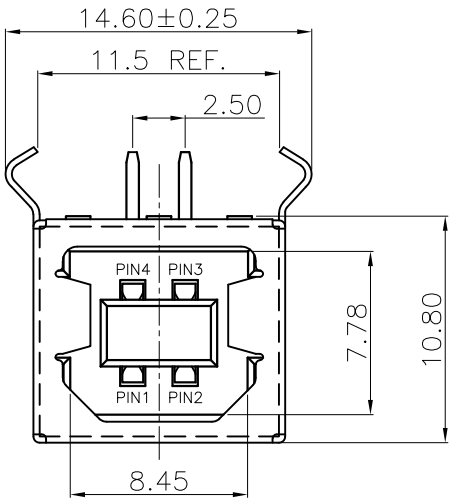

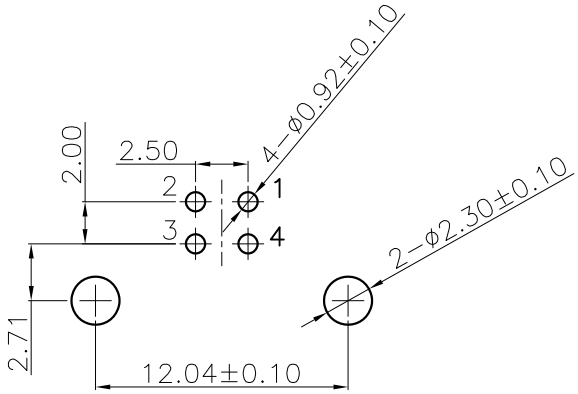

RECOMMENDED PCB LAYOUT(TOP VIEW)
GENERAL TOLERANCES: ±0.05

MATRIX PART NO:

MUSB 04 - 01 - 187A

- MUSB: MATRIX USB
- 04: Pin Number
- 01: Plating 01:Gold Flash
- 187A: Series number

Matrix Electronics Co.,Ltd

TOLERANCE: X ±0.35, X.X ±0.25, X.XX ±0.15, X.XXX ±0.15, ANGLE: ±3°	DESIGN BY : Ken Lin	DATE : 2024/02/19	PART NAME: USB-BF-90°插板式
	CHECKED BY: Hanson Huang	DATE : 2024/02/19	PART NO. MUSB04-01-187A
UNIT: mm [inch]	APPROVED BY1: Richard Hsieh	DATE : 2024/02/19	MOLD NO. NA
	APPROVED BY2: Richard Hsieh	DATE : 2024/02/19	DRAW NO.
SCALE:1:1 SIZE:A4			SHEET NO. 1 OF 1