GP Component

REV.	ECN NO.	LOCATIONS	DESCRIPTION	DATE	DESIGN
A0			Initial	2016/04/12	Phebe Su
A1			Add DIM	2016/08/19	Phebe Su
A2			Add butterfly buckle	2018/06/20	Phebe Su

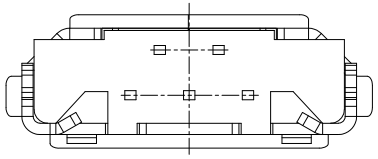

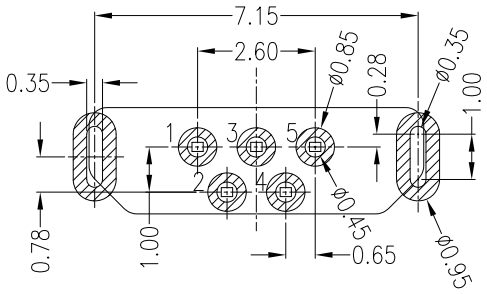

RECOMMANDED PCB LAYOUT

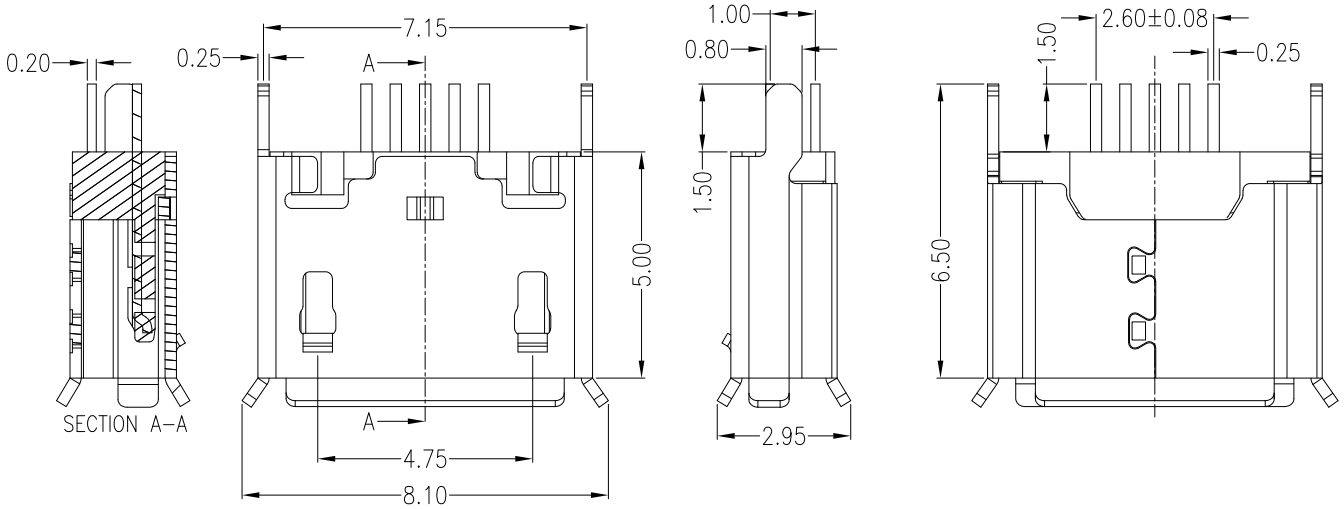

Note:

1.Material:

- 1.1 Housing: LCP UL94V-0 BLACK
- 1.2 Contact: COPPER ALLOY,t=0.20mm,
- 1.3 Shell: SUS304,t=0.25mm,

2.Specification:

- 2.1 Current rating:1,5PIN 1.8A Max/2,3,4PIN 1A Max.
- 2.2 Rated voltage:30VAC
- 2.3 Dielectric withstanding voltage: 100 V(ac) for 1 min.
- 2.4 Contact resistance: 30 mΩ Max.
- 2.5 Insulation resistance: 100 MΩ Min.
- 2.6 Total mating force: 3.57 Kgf Max.
- 2.7 Total unmating force: 1.0 Kgf Min.
- 2.8 Temperature range: -40°C~85°C

MATRIX PART NO:

MUSB 05 - 03 - 155

- MUSB: MATRIX USB
- 05: Pin Number
- 03: Plating 01:Gold Flash 03:3u"
- 155: Series number

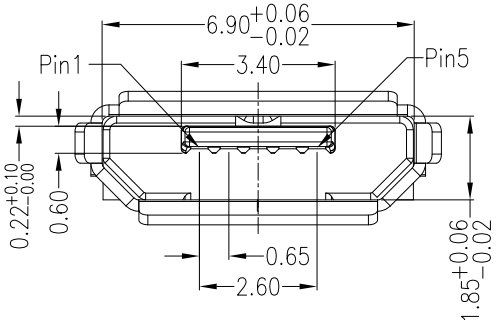

PIN NO.	SLGNAL NAME
PIN 1	V BUS
PIN 2	D-
PIN 3	D+
PIN 4	ID
PIN 5	GND

Matrix Electronics Co.,Ltd

TOLERANCE: X. ±0.20; X.X ±0.20; X.XX ±0.15; X.XXX ±0.05; ANGLE: ±3°	DESIGN BY : Phebe Su	DATE : 2018/06/20	PART NAME: MICRO 5P/F B TYPE 180 DIP	
	CHECKED BY: Vicky Hsieh	DATE : 2018/06/20	PART NO.	MUSB05-03-155
	APPROVED BY1: Richard Hsieh	DATE : 2018/06/20	MOLD NO.	NA
UNIT: mm [inch]	APPROVED BY2: Richard Hsieh	DATE : 2018/06/20	DRAW NO.	
SCALE:1:1 SIZE:A4			SHEET NO.	1 OF 1