GP Component

REV.	ECN NO.	LOCATIONS	DESCRIPTION	DATE	DESIGN
A0			Initial	2017/06/12	Phebe Su
A1			Change shell material	2018/01/02	Phebe Su
A1.1			Change Dim.	2023/12/27	Ken Lin

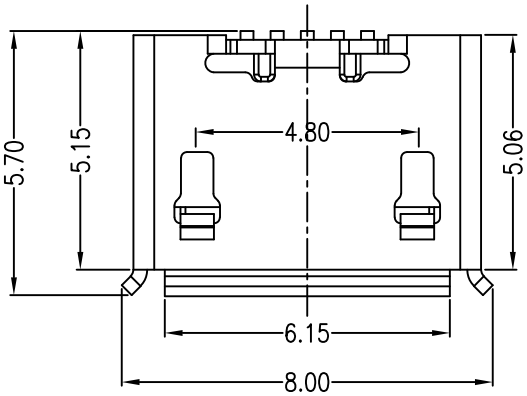

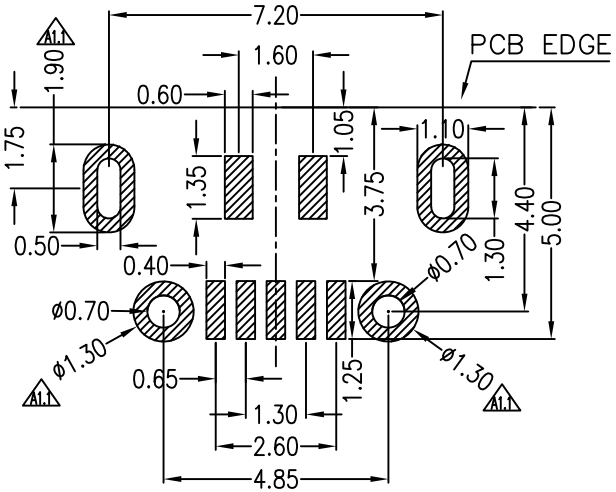

PCB图仅供参考

NOTES:

1.MATERIAL:

1.1 HOUSING: HIGH TEMPERATURE PLASTIC, LCP BLACK

1.2 CONTACT: COPPER ALLOY. t=0.15mm

A1 1.3 SHELL: SUS304, t=0.30mm

2.ELECTRICAL SPECIFICATION:

3.1 CURRENT RATING:1,5PIN 1.8A Max/2,3,4PIN 1A Max.

3.2 VOLTAGE:30 VAC

3.3 TEMPERATURE RANGE:-40°C~85°C

3.4 CONTACT RESISTANCE:30 MILLIONHM MAX.

3.5 DIELECTRIC WITHSTANDING VOLTAGE:100 V(ac) for 1 min.

3.6 INSULATION RESISTNACE:100 MEGOHMS MIN

3.MECHANICAL SPECIFICATION:

MATING FORCE:35N MAX

UNMATING FORCE:8N MIN

DURABILITY:5000 CYCLES

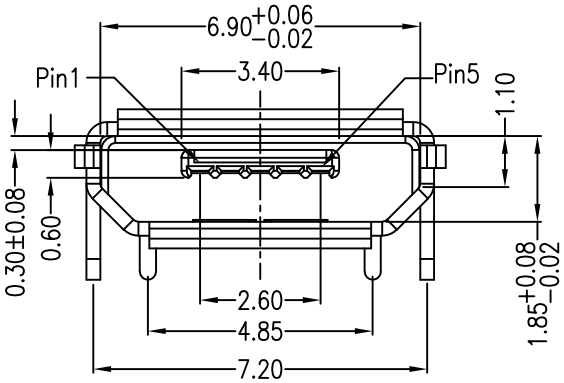

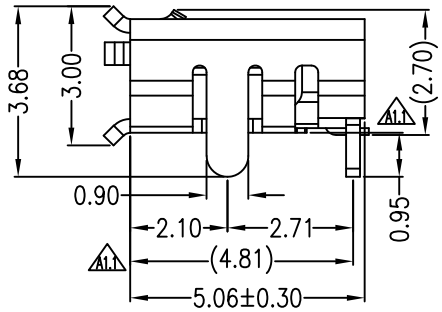

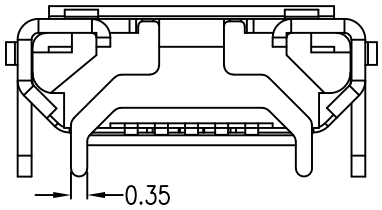

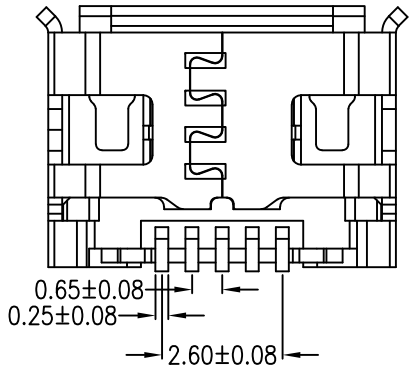

MATRIX PART NO:

MUSB 05 - 01 - 285

Matrix-USB

Pin number

Gold Plating:
01=1u"
03=3u"
30=30u"

Series Number

Pin Assignments

Contact Number	Signal Name
1	VBUS
2	D-
3	D+
4	ID
5	GND
Shell	Shield

Matrix Electronics Co.,Ltd

TOLERANCE: X ±0.15, X.X ±0.10, X.XX ±0.05, X.XXX ±0.05, ANGLE: ±3°	DESIGN BY : Ken Lin	DATE : 2023/12/27	PART NAME: MICRO USB B/F SMD
	CHECKED BY: Hanson Huang	DATE : 2023/12/27	PART NO. MUSB05-01-285
UNIT: mm [inch]	APPROVED BY1: Richard Hsieh	DATE : 2023/12/27	MOLD NO. NA
	APPROVED BY2: Richard Hsieh	DATE : 2023/12/27	DRAW NO.
SCALE:1:1 SIZE:A4			SHEET NO. 1 OF 1