GP Component

REV.	ECN NO.	LOCATIONS	DESCRIPTION	DATE	DESIGN
A0			Initial	2017/04/24	Phebe Su
A1			Change	2018/04/26	Phebe Su
A2			Optimized molding	2019/07/05	Phebe Su

1. MECHANICAL:

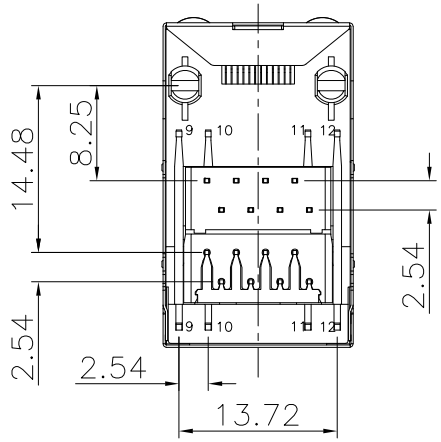

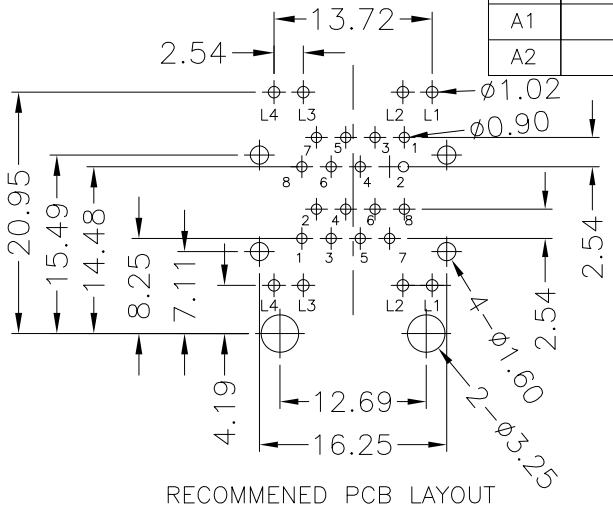

RECOMMENED PCB LAYOUT
TOLERANCE ±0.05

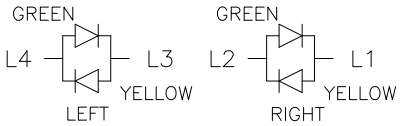

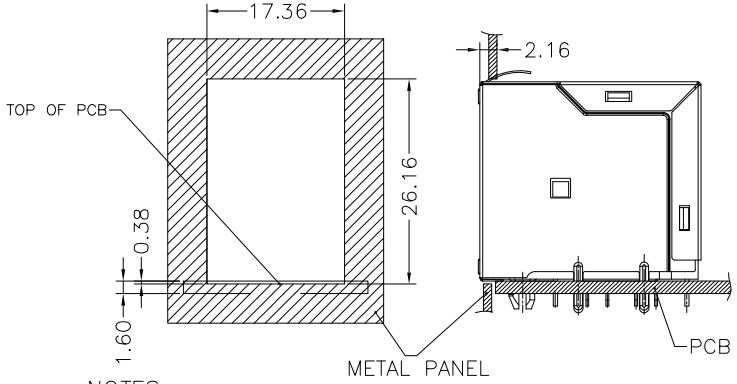

NOTES:
1.MATERIAL:
HOUSING: PBT,UL94V-0,COLOR:BLACK
CONTACT: PHOSPHOR BORNZE,T=0.35
SHELL: COPPER ALLOY T=0.2MM
2.FINISH:
CONTACT: GOLD 3u" ON CONTACT AREA, 80u min. TIN PLATING ON SOLDERTAIL
SHELL: NICKEL PLATING OVERALL
3.LED SPEC:
PEAK WAVE LENGTH: GREEN:520~530nm,YELLOW:587~593nm
4.OPERATION TEMPERATURE: -40~85°C
5.JACK CAVITY CONFORMS TO FCC RULES AND REGULATIONS PART 68, SUBPART F

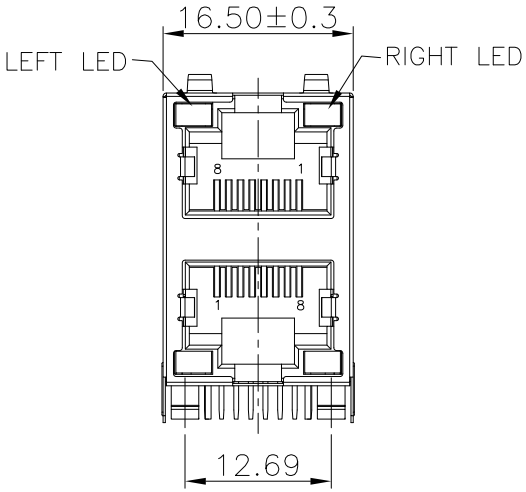

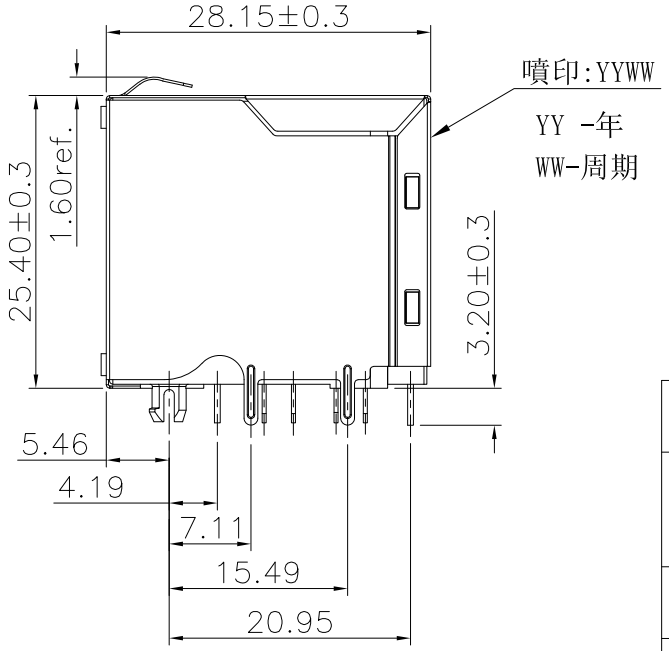

ORDER INFORMATION:

MRJ N - 21 T 834 T RS

- Matrix-RJ45
- F :10/100
- G :10/100/1000
- N :Pure Connector
- 11:1X1 ; 21:2X1
- 12:1X2 ; 22:2X2
- 14:1X4 ; 24:2X4
- 16:1X6 ; 26:2X6
- 18:1X8 ; 28:2X8
- 1U:RJ+USB
- S: SMD
- T: THT
- Series Number
- Industrial temperature
- RS: ROHS
- HF: Halogen Free

Matrix Electronics Co.,Ltd

TOLERANCE: X. X.X ±0.38 X.XX ±0.25 X.XXX ±0.13 X.° ±2° X.X° ±1°	DESIGN BY : Phebe Su	DATE : 2019/07/05	PART NAME: RJ45 2X1 CONN,W/LED	
	CHECKED BY: Vicky Hsieh	DATE : 2019/07/05	PART NO.	MRJN-21T834TRS
	APPROVED BY1: Richard Hsieh	DATE : 2019/07/05	MOLD NO.	NA
UNIT: mm [inch]	APPROVED BY2: Richard Hsieh	DATE : 2019/07/05	DRAW NO.	
SCALE:1:1 SIZE:A4			SHEET NO.	1 OF 1