GP Component

REV.	ECN NO.	LOCATIONS	DESCRIPTION	DATE	DESIGN
A0			Initial	2017/12/26	Phebe Su
A1			Change pin length	2019/06/14	Phebe Su
A2			Change LED & DIM.	2021/07/29	Hanson

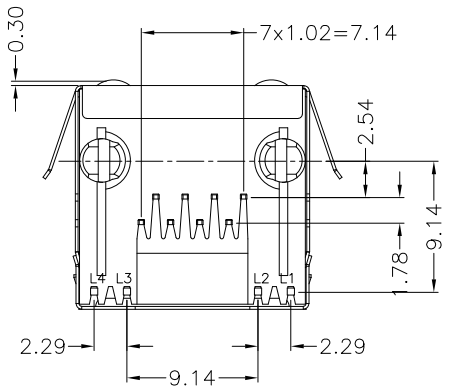

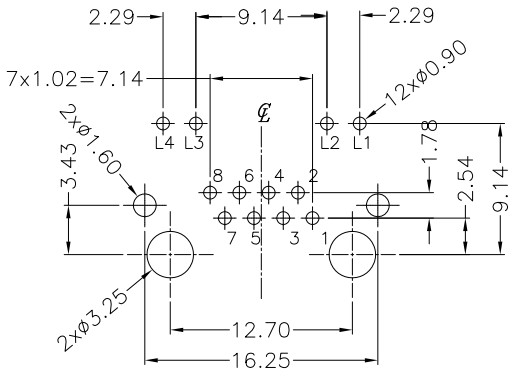

RECOMMENED PCB LAYOUT
COMPONENT SIDE
TOLERANCE ±0.05

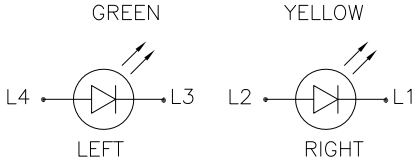

NOTES:
1. MATERIALS:
   HOUSING: PBT, UL94V-0, BLACK.
   CONTACTS: T=0.30 mm PHOSPHOR BRONZE,
   50u" Min. NICKEL UNDERPLATE
   100u" Min. TIN ON SOLDERTAIL
   GOLD FLASH ON CONTACT AREA.
   SHELL:STAINESS T=0.20 NICKEL 30u" Min. OVERALL
2. OPERATING TEMPERATURE: -40℃ ~ +85℃
3. LED SPEC
   1)FORWARD VOLTAGE:1.8~2.4V
   2)REVERSE CURRENT:10uA MAX
   3)PEAK WAVE LENGTH:
   GREEN:565~575nm,AMBER:600~610nm
4. ELECTRICAL:
   1)VOLTAGE:125VAC
   2)RATING:1.5A
   3)CONTACT RESISTANCE:20mΩ MAX
   4) INSULATION:500MΩ MIN.
   5) DIELECTRIC:
   AC 1KV 1mA ,60S BETWEEN ADJACENT CONTACTS
   AC 1.5KV 1mA ,60S,BETWEEN CONTACTS AND SHELL

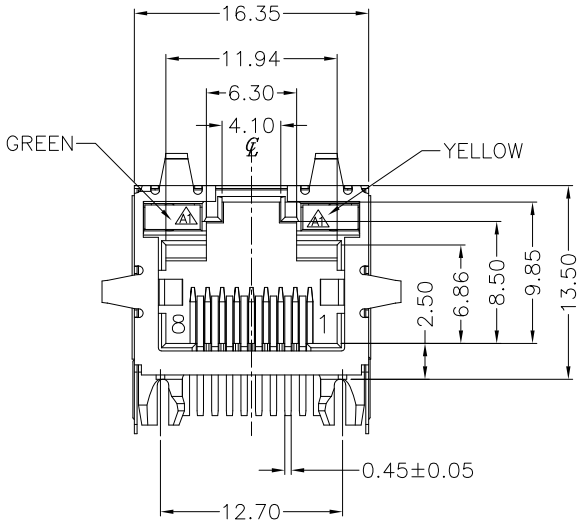

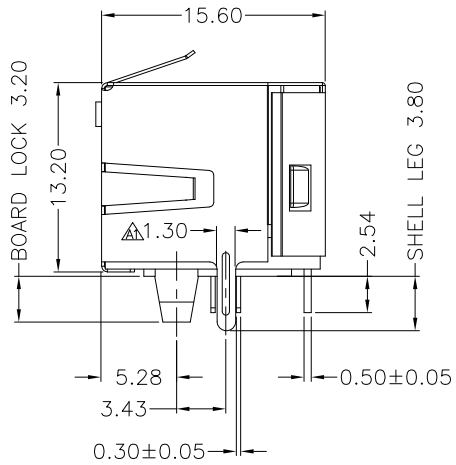

MATRIX PART NO:

M R J N - 1 1 T 785 T R S

- Matrix-RJ45
- F : 10/100
  G : 10/100/1000
  N : Pure Connector
- 11:1X1 ; 21:2X1
  12:1X2 ; 22:2X2
  14:1X4 ; 24:2X4
  16:1X6 ; 26:2X6
  18:1X8 ; 28:2X8
  1U:RJ+USB
- S : SMD
  T : THT
- Series Number
- Industrial temperature
- RS : ROHS
  HF : Halogen Free

Matrix Electronics Co.,Ltd

TOLERANCE: X. ±0.38, X.X ±0.25, X.XX ±0.20, X.XXX ±0.13, ANGLE: ±3°	DESIGN BY : Hanson Huang	DATE : 2021/07/29	PART NAME: RJ45,CONNECTORS,W/LED&SHIELDING	
	CHECKED BY: Vicky Hsieh	DATE : 2021/07/29	PART NO.	MRJN-11T785TRS
UNIT: mm [inch]	APPROVED BY1: Richard Hsieh	DATE : 2021/07/29	MOLD NO.	NA
SCALE:1:1 SIZE:A4	APPROVED BY2: Richard Hsieh	DATE : 2021/07/29	DRAW NO. / SHEET NO.	1 OF 1