GP Component

REV.	ECN NO.	LOCATIONS	DESCRIPTION	DATE	DESIGN
A0			Initial	2017/11/23	Phebe Su
A1			Change dimension	2017/12/15	Summer Wang

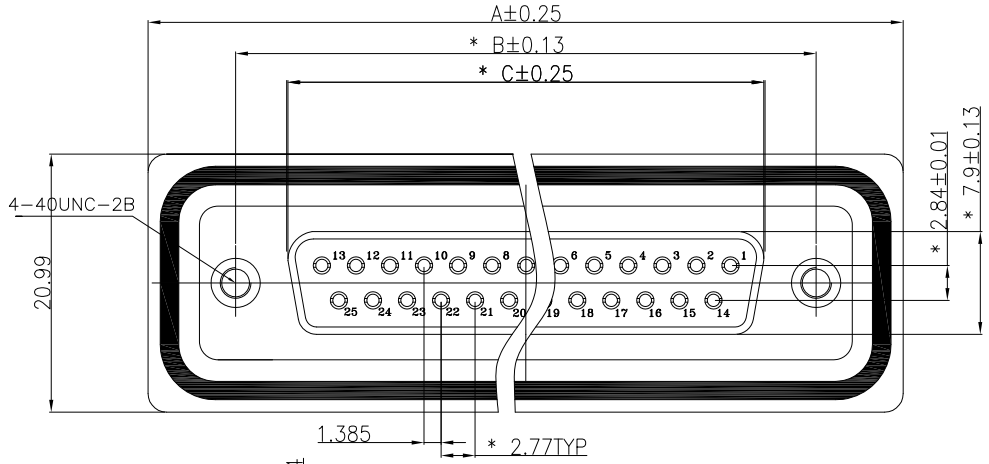

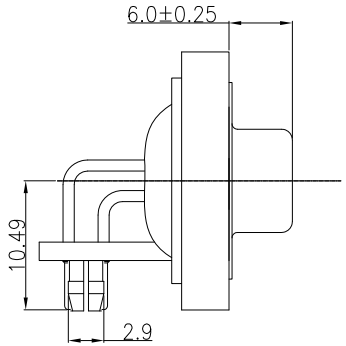

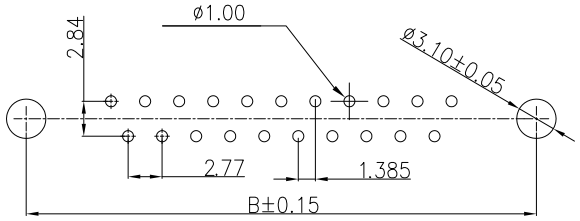

P.C.B LAYOUT

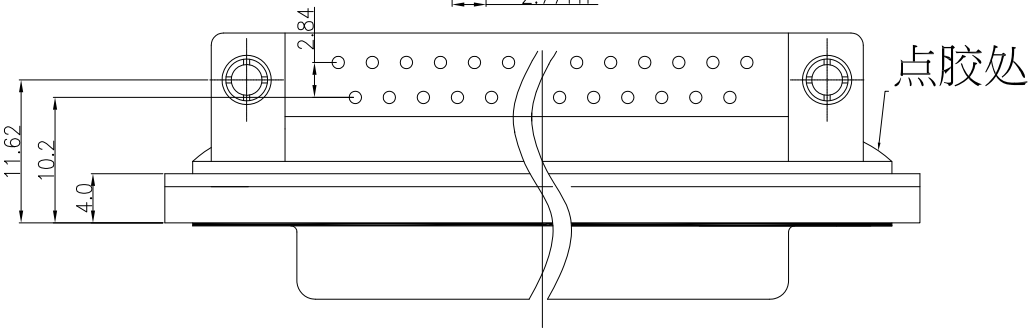

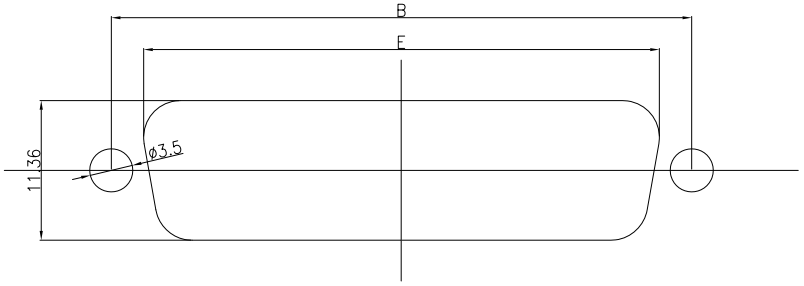

Description:

1 Features:

Waterproof grade: IP66 ~ IP68 (temporary invasion did not, the biggest extreme pressure 1.3psi or 1 m water depth)

Rated voltage: 500V AC MIN

Rated current: 5A

Contact resistance: 30mΩ MAX.

Insulation resistance: 5000MΩ MIN.at 500V DC

Rated voltage: 500V AC RMS for 1Minute

Temperature range:-55C ° ~ +105 C °

Wire core range: 22AWG ~ 26AWG

(2) Material:

Plastic core: PBT +30% G.F (UL94V-0)-WH

Car PIN: C3604 (BRASS), gold-plated 1U

Iron Shell: SPCC, nickel-plated

3 Note:

a. encollage can not have bubbles, glue seepage phenomena.

b. spray tested 48H can not have oxidation rusting.

c. Finished not have a curved needle, R angular inconsistencies and other undesirable.

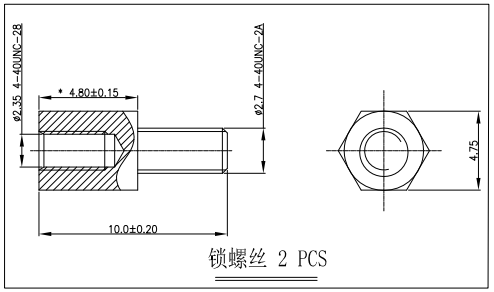

锁螺丝 2 PCS

MATRIX PART NO:

MDS 09 - 01 - 29

MATRIX D-SUB Pin Number

Plating
01:Gold Flash
10:10u"
30:30u"

Series number

PIN	A	B	C	D	E
9	39.40	24.99	16.33	2.29	19.92

NO	VARIETY	QTY	METERIAL	REMARK

Matrix Electronics Co.,Ltd

TOLERANCE: X. ±0.10, X.X ±0.05, X.XX ±0.03, X.XXX ±0.03, ANGLE: ±3°	DESIGN BY : Summer Wang	DATE : 2017/12/15	PART NAME: Waterproof D-SUB 9pin
	CHECKED BY: Vicky Hsieh	DATE : 2017/12/15	PART NO. MDS09-01-29
	APPROVED BY1: Richard Hsieh	DATE : 2017/12/15	MOLD NO. NA
UNIT: mm [inch]	APPROVED BY2: Richard Hsieh	DATE : 2017/12/15	DRAW NO.
SCALE:1:1 SIZE:A4			SHEET NO. 1 OF 1