GP Component

REV.	ECN NO.	LOCATIONS	DESCRIPTION	DATE	DESIGN
A0			Initial	2017/12/22	Phebe Su
A1			Optimize the bottom of the molded case	2019/02/26	Phebe Su

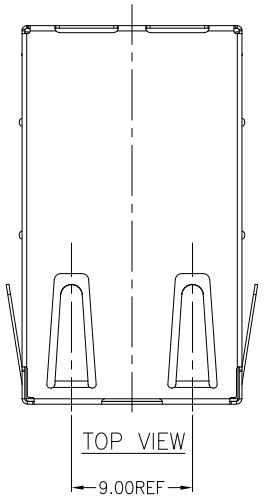

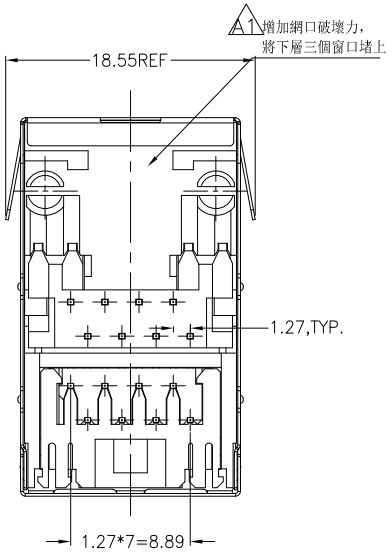

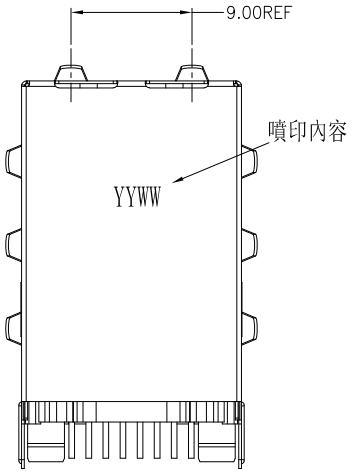

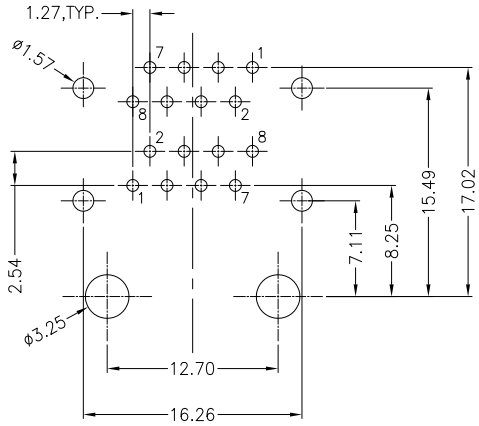

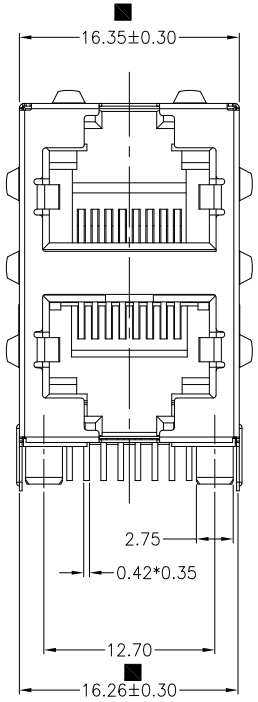

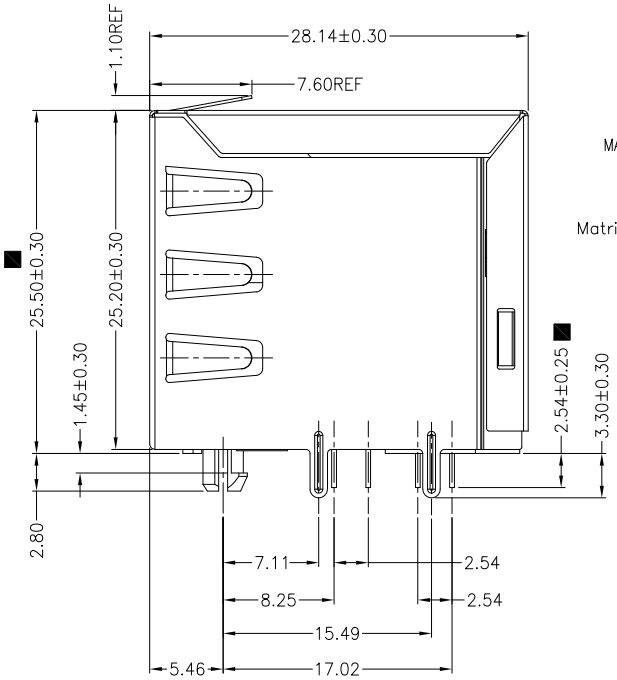

MATRIX PART NO:

M R J N – 2 1 T 981 R S

- Matrix–RJ45
- F : 10/100
- G : 10/100/1000
- N : Pure Connector
- 11:1X1 ; 21:2X1
- 12:1X2 ; 22:2X2
- 14:1X4 ; 24:2X4
- 16:1X6 ; 26:2X6
- 18:1X8 ; 28:2X8
- 1U:RJ+USB
- S:SMD
- T:THT
- Series Number
- RS:ROHS
- HF:Halogen Free

NOTES:
1.MATERIAL:
HOUSING:PA6T BLACK, UL 94V–0
CONTACT:PHOSPHOR BORNZE,T=0.35mm
SHELL:BRASS, T=0.20mm
2.FINISH:
CONTACT:50u"MIN. NICKEL UNDERPLATING ALL AREA,
100u"MIN. TIN ON SOLDERTAILS,
GOLD 6u" PLATING ON CONTACT .
SHELL:30u"MIN. NICKEL UNDERPLATING ALL AREA
3.OPERATING TEMPERTURE:–40°C~+85°C.
4.JACK CAVITY CONFORMS TO FCC RULES AND REGULATIONS PART 68, SUBPART F

Matrix Electronics Co.,Ltd

TOLERANCE: X. ±0.5; X.X ±0.38; X.XX ±0.20; X.XXX ±0.13; ANGLE: ±3°	DESIGN BY : Phebe Su	DATE : 2019/02/26	PART NAME: RJ45 2x1 JACK W/O LED, 8P8C, Shielded, Thru–Hole	
	CHECKED BY: Janice Liu	DATE : 2019/02/26	PART NO.	MRJN–21T981RS
	APPROVED BY1: Richard Hsieh	DATE : 2019/02/26	MOLD NO.	NA
UNIT: mm [inch]	APPROVED BY2: Richard Hsieh	DATE : 2019/02/26	DRAW NO.	
SCALE:1:1 SIZE:A4			SHEET NO.	1 OF 1