GP Component

REV.	ECN NO.	LOCATIONS	DESCRIPTION	DATE	DESIGN
A0			Initial	2014/10/06	Phebe Su

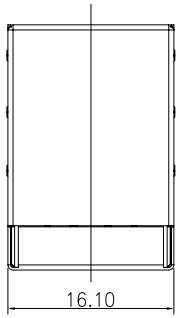

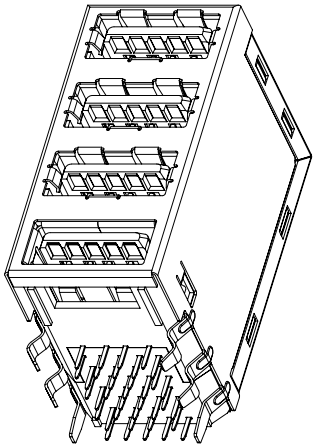

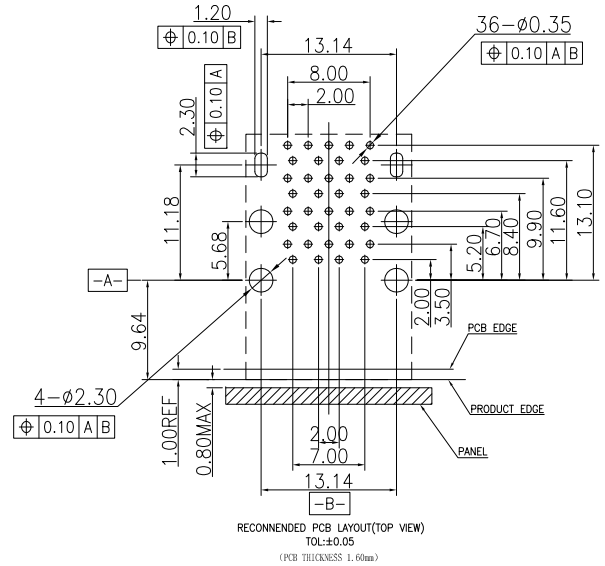

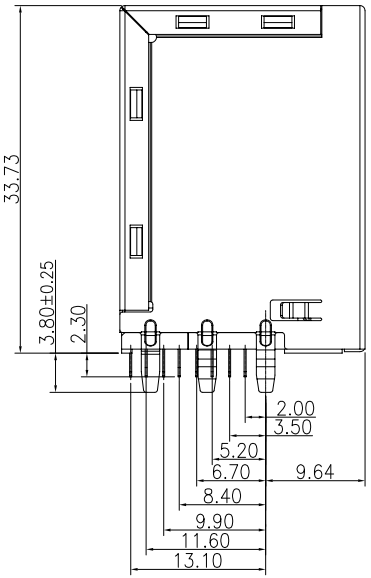

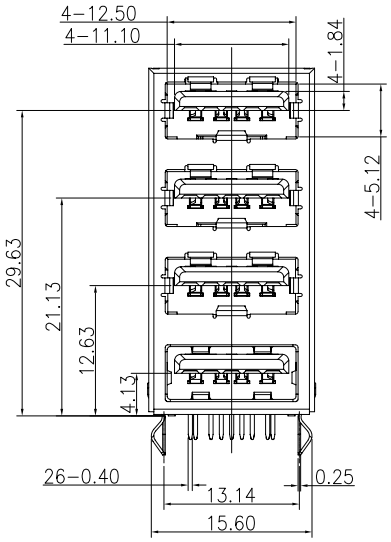

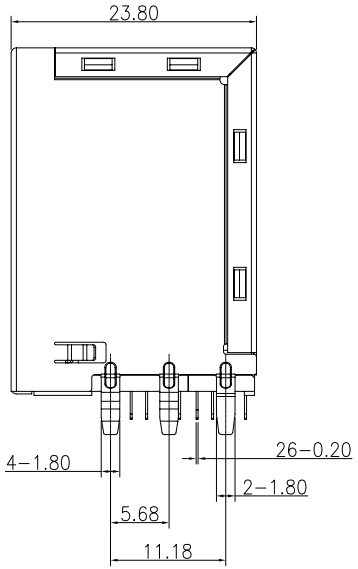

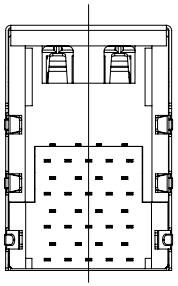

NOTES:

1.MATERIAL:

- 1.1 HOUSING: PA66 UL 94V-0,COLOR:BLUE
- 1.2 SPCER:LCP UL 94V-0,COLOR:BLACK
- 1.3 CONTACT: BRASS C2680
- 1.4 FRONT SHELL:SUS304
- 1.5 BACK SHELL:SUS304
- 1.6 IN SHELL:SUS304

2.FINISH:

- 2.1 CONTACT: Gold FLASH/NI 50u" Tin 100u" PLATING
- 2.2 FRONT SHELL:NI 50u" PLATING.
- 2.3 BACK SHELL:NON PLATING
- 2.4 IN SHELL:NON PLATING

MATRIX PART NO:

MUSB 36 - 01 - 86

- MUSB: Matrix-USB
- 36: Pin number
- 01: Gold Planting: 01=Gold Flash, 15=5u, 30=30u
- 86: Series Number

NO	VARIETY	QTY	METERIAL	REMARK

Matrix Electronics Co.,Ltd

TOLERANCE: X. ±1.0; X.X ±0.30; X.XX ±0.25; X.XXX ±0.15; ANGLE: ±3°	DESIGN BY : Phebe Su	DATE : 2014/10/06	PART NAME: USB 3.0 X 4PORT	
	CHECKED BY: Vicky Hsieh	DATE : 2014/10/06	PART NO.	MUSB36-01-86
	APPROVED BY1: Richard Hsieh	DATE : 2014/10/06	MOLD NO.	NA
UNIT: mm [inch]	APPROVED BY2: Richard Hsieh	DATE : 2014/10/06	DRAW NO.	
SCALE:1:1 SIZE:A4			SHEET NO.	1 OF 1